Ethics in Information Technology

Chapter 3
Computer and Internet Crime

Learning Objectives

- What key trade-offs and ethical issues are associated with the safeguarding of data and information systems?
- Why has there been a dramatic increase in the number of computer-related security incidents in recent years?
- What are the most common types of computer security attacks?
- Who are the primary perpetrators of computer crime, and what are their objectives?

Learning Objectives

- What are the key elements of a multilayer process for managing security vulnerabilities based on the concept of reasonable assurance?
- What actions must be taken in response to a security incident?
- What is computer forensics, and what role does it play in responding to a computer incident?

Ethical Decisions Regarding IT Security

- To deal with computer crime, the firm should:
  - **Pursue prosecution of the criminals at all costs** ملاحقة المجرمين بكل الطرق

The company should take legal action against cybercriminals, regardless of the difficulty or cost

  - **Maintain a low profile to avoid the negative publicity**

•Some firms may choose to manage the issue quietly to protect their reputation and avoid customer panic or media backlash.الذعر لدى العملاء أو رد الفعل العنيف من وسائل الإعلام
•While this might reduce immediate damage, it raises ethical concerns around transparency.

  - **Inform affected customers or take some other action**

•Ethically, the firm has a responsibility to notify customers whose data or privacy might be compromised.
•Transparency builds trust and allows customers to take precautionary measures.

Ethical Decisions Regarding IT Security
Following decisions should be taken by the firm:

How much resources should be spent to safeguard against computer crime

Budgeting for cybersecurity (tools, training, infrastructure) is a crucial decision.

Overspending might not be sustainable, but underfunding exposes the firm and customers to risk.

What actions should be taken when a software is found susceptible عرضة to hacking

The firm needs a response plan when software vulnerabilities are discovered—patches, updates, or even replacing the software.

Delaying action could leave systems open to attack.

- **What should be done if recommended computer security safeguards increase operating costs**

Sometimes, the best security measures are expensive.

The firm must decide if the increased cost is justified by the reduced risk and ethical duty to protect stakeholders.

This is a trade-off between ethics, security, and business efficiency.

Why Computer Incidents are So Prevalent شائعة جدًا

- **Increasing complexity increases vulnerability**
  - **Number of entry points** to a network expands continually, increasing the possibility of security breaches(If a company adds more applications, mobile devices, cloud services, and IoT devices, its network becomes harder to monitor and secure completely)
  - **Cloud computing**: Environment where software and data storage are provided via the Internet
    - Data and apps are stored offsite — often with third-party providers — so there's **less direct control** over security.
    - Cloud systems are exposed to the internet, which increases attack surfaces (anyone online could attempt to access it).
  - **Virtualization software**: Operates in a software layer that runs on top of the operating system
    - Enables multiple **virtual machines** to run on a single Computer
    - Each VM can act like a separate computer, with its own operating system and applications
    - If the virtualization layer is compromised, **all VMs on the system are at risk**.
    - Attackers may try to **escape** from one VM to the host or other VMs (known as **VM escape attacks**).
    - It adds a **new layer of software** that must be secured and monitored.

Why Computer Incidents are So Prevalent(why cybersecurity problems are so common nowadays)

- **Higher computer user expectations**

As technology becomes more powerful and convenient, users also expect it to be fast, easy, and available 24/7. However, this often leads to **careless behavior** that creates security risks.

  - Not verifying users'
  - Sharing of login IDs and passwords by users

- Expanding and changing systems require one to:

(As businesses grow and adopt new technologies, their systems become more **complex and harder to secure**. To stay safe, organizations must do the following:)

  - Keep up with the pace وتيرة of technological change
  - Perform an ongoing assessment of new security risks

    •As systems change, **new threats appear**.
    •Companies must continuously **evaluate and test** their systems to discover weak points.

  - Implementing approaches for dealing with them

Once risks are identified, action must be taken — such as:

- Installing updates or security patches
- Adjusting access controls
- Training employees
- Setting up firewalls and monitoring systems

Why Computer Incidents are So Prevalent

- **Bring your own device (BYOD)**: Business policy that permits employees to use their own mobile devices to access company computing resources and applications
- Increased reliance on commercial software with known vulnerabilities
  - **Exploit**: Attack on an information system that takes advantage of a particular system vulnerability(An **attack** that takes advantage of a **known flaw** in the software or system.)الهجوم على نظام معلومات يستغل ثغرة معينة في النظام

الهاكرز يعرفون أن هناك ثغرة في برنامج معيّن، ويقومون بكتابة كود أو أدوات لاستغلالها.

  - **Zero-day attack**: Takes place before the security community or software developer knows about the vulnerability or has been able to repair it

Types of Exploitsثغرات امنية

Virus

- Piece of programming code, disguised as something else, that causes a computer to behave in an unexpected and undesirable manner قطعة من كود البرمجة، متخفية في شكل شيء آخر، تتسبب في تصرف الكمبيوتر بطريقة غير متوقعة وغير مرغوب فيها

Worm

- Harmful program that resides in the active memory of the computer and duplicates itself برنامج ضار يتواجد في الذاكرة النشطة للكمبيوتر ويكرر نفسه

Trojan Horse

- Program in which malicious code is hidden inside a seemingly harmless program
- **Logic bomb**: Executes when it is triggered by a specific event

Types of Exploitsثغرات امنية

Virus

A **virus** is a type of malicious code that is **embedded in another program or file**, and it typically requires **user action** (like opening a file or running a program) to activate.

•**Behavior**: Once activated, it can perform harmful actions such as deleting files, corrupting data, or spreading to other programs.

•**Key Characteristics**:

- **Disguised** as something harmless.
- Spreads by **attaching itself** to legitimate files or applications.
- Needs a **host program** and usually needs user intervention to spread.

Types of Exploitsثغرات امنية

Worm

• A **worm** is a self-replicating malware that **spreads without needing a host file or user interaction**.

•**Behavior**: It actively looks for vulnerabilities in other computers on a network and copies itself into them.

•**Key Characteristics**:

- Resides in **active memory**.
- **Autonomously spreads** over networks.
- Can cause massive slowdowns and network congestion. يمكن أن يسبب تباطؤًا كبيرًا وازدحامًا في الشبكة

How do worms spread?

•Via email attachments

•Through infected USB drives

•Over local networks (like Wi-Fi at home or office)

Types of Exploitsثغرات امنية

Trojan Horse

A Trojan Horse is a malicious program disguised as a legitimate or harmless application.
•Behavior: Unlike viruses and worms, Trojans do not self-replicate. Instead, they rely on tricking the user into executing them.
•Key Characteristics:

- Appears useful or benign but contains malicious code.
- Often used to create **backdoors** into the system.

How does it work?
You might download what you think is a:
•Free game
•Software patch
•Email attachment
•Music or movie file

•Logic Bomb (a subtype):

- Malicious code that remains **dormant** until triggered by a specific condition (e.g., a date, or the deletion of a file).
- Can cause significant damage when activated.

Types of Exploitsثغرات امنية

Spam

- Abuse of email systems to send unsolicited غير مرغوب فيه email to large numbers of people
- **CAPTCHA (Completely Automated Public Turing Test to Tell Computers and Humans Apart)**

Common CAPTCHAs include المشوه distorted text recognition, image selection, and puzzles.

- Generates and grades tests that humans can pass but computer programs cannot

Distributed Denial-of-Service (DDoS) Attack

- Causes computers to flood a target site with demands for data and other small tasks

Rootkit

- Enables user to gain administrator-level access to a computer without the end user's consent

Phishing

- Fraudulently using email to try to get the recipient to reveal personal data

Types of Exploitsثغرات امنية

Rootkit

•A rootkit is a collection of malicious software tools that allow unauthorized users to gain and maintain privileged (administrator-level) access to a system.

•**Stealth**:التخفي Often hides its existence and the existence of other malware to avoid detection.

•**Impact**:

- Can disable security software.
- May allow continuous monitoring or control of the victim's system.
- Very difficult to detect and remove once installed.

Types of Exploitsثغرات امنية

Phishing

• A cyberattack that uses deceptive emails (or messages) to trick individuals into revealing sensitive information, such as usernames, passwords, or credit card details.

•**Common Traits**::الخصائص الشائعة

- Mimics trusted organizations (e.g., banks, government, companies).
- Often includes a link to a fake website designed to look legitimate.
- Can also include malicious attachments.

•**Consequences**:

- Identity theft.
- Financial loss.
- Compromised personal or corporate data.

Figure 3.2 - Distributed Denial-of-Service Attack

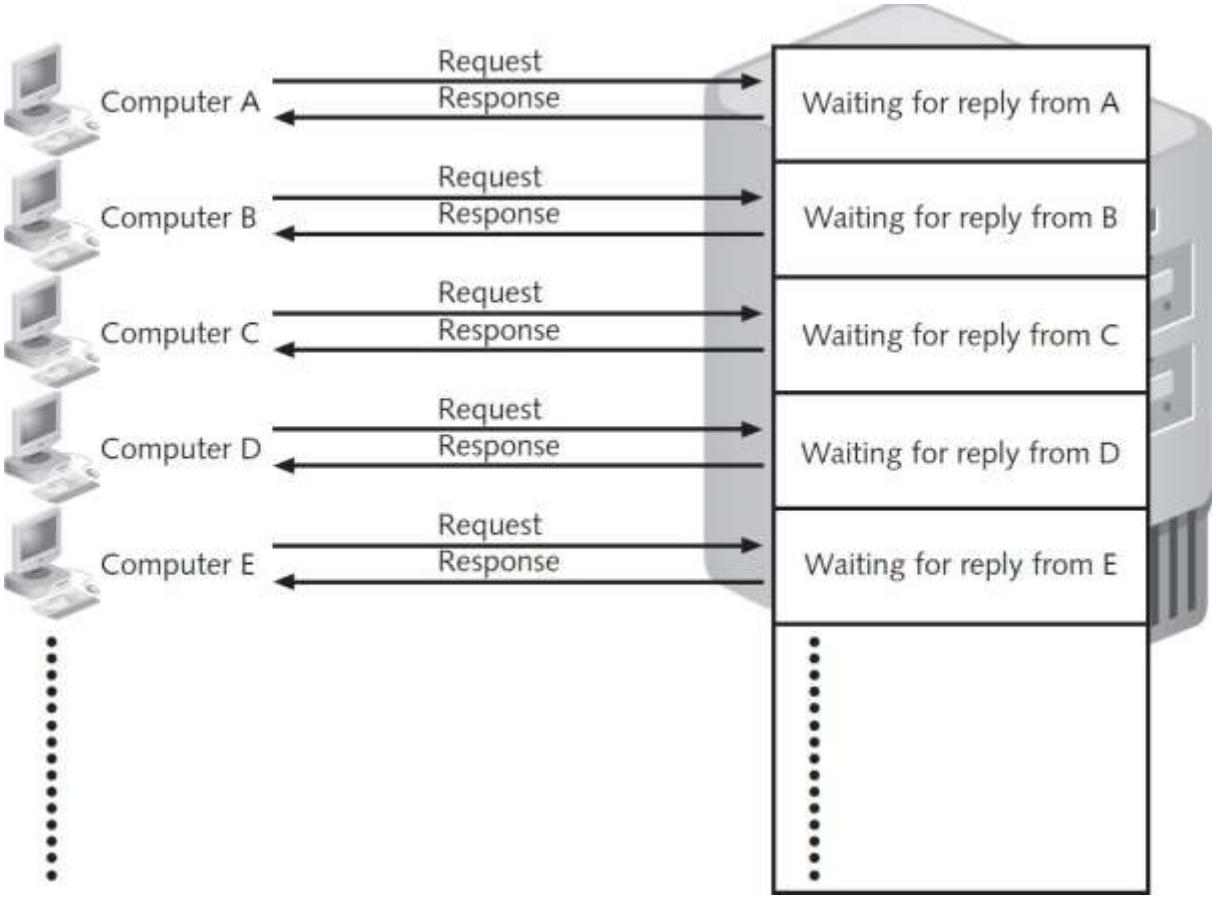

Source Line: Course Technology/Cengage Learning.

CAN-SPAM Actقانون مكافحة الرسائل الإعلانية غير المرغوب فيها

- **Controlling the Assault of Non-Solicited Pornography and Marketing (CAN-SPAM) Act** م إصداره في الولايات المتحدة عام **2003** بهدف **حماية** **المستخدمين من الرسائل الإلكترونية الإعلانية المزعجة** **(Spam).**

عقوبات مخالفة القانون:
يمكن تغريم الشركة حتى **51,744 دولارًا لكل رسالة مخالفة** (حسب التحديثات الأخيرة).
في الحالات الخطيرة (مثل الاحتيال)، قد تكون هناك **عقوبات جنائية** أيضًا.

- It is legal to spam, provided the messages meet a few basic requirements
- Spammers cannot disguise their identity

إذا أرسلت شركة بريدًا إلكترونيًا ترويجيًا لك، يجب أن:
توضح من هو المرسل،
تتضمن رابطًا واضحًا لـ "إلغاء الاشتراك"،
وتتوقف عن الإرسال إذا طلبت ذلك.

Botnet

- Group of computers which are controlled from one or more remote locations by hackers, without the knowledge or consent of their owners
- **Zombies**: Computers that are taken over
- used to distribute spam and malicious code تم الاستيلاء عليها

هي الحواسيب التي تم **التحكم فيها عن بُعد** وأصبحت تنفذ أوامر الهاكر **بدون إذن أو معرفة من صاحب الجهاز**.

Types of Phishing

- **Spear-phishing التصيد الاحتيالي**: Phisher sends fraudulent emails to a certain organization's employees
  - Emails are designed to look like they came from high- level executives within the organization
- **Smishing التصيد الاحتيالي عبر الرسائل النصية القصيرة**: Legitimate-lookin text message sent to people, telling them to call a specific phone number or to log on to a Web site

رسالة نصية تبدو شرعية يتم إرسالها إلى الأشخاص، تطلب منهم الاتصال برقم هاتف معين أو تسجيل الدخول إلى موقع ويب

- **Vishing التصيد الصوتي**: Victims receive a voice mail telling them t call a phone number or access a Web site

It's when **scammers محتالين use phone calls or voice messages** to trick people into giving personal information like:

•Bank account numbers

•Passwords

•Credit card info

Types of Perpetrators الجناة

- Thrill seekers wanting a challenge الباحثون عن الإثارة يريدون التحدي
- Common criminals looking for financial gain
- Industrial spies trying to gain a competitive advantage
- Terrorists seeking to cause destruction to further their cause

Table 3.5 - Classifying Perpetrators of Computer Crime

Type of perpetrator	Typical motives
Hackers	Test limits of system and/or gain publicity
Crackers	Cause problems, steal data, and corrupt systems
Malicious insiders	Gain financially and/or disrupt company's information systems and business operations
Industrial spies	Capture trade secrets and gain competitive advantage
Cybercriminals	Gain financially
Hacktivists	Promote political ideology
Cyberterrorists	Destroy infrastructure components of financial institutions, utilities, and emergency response units

Source Line: Course Technology/Cengage Learning.

Types of Perpetrators

1. Hackers

- **Hackers** are individuals who have strong technical knowledge and skills in computer systems, programming, and networks.

- They use these skills to **explore**, **manipulate**, or **bypass** systems—sometimes for good, and sometimes for bad.
- **Hackers**: Test the limitations of information systems out of intellectual curiosity الفضول الفكري
- **Test the limitations** – This means they try to see what a system **can** and **cannot** do. They might try to find weaknesses or gaps.
- **Out of intellectual curiosity** – This means they do it because they are curious and want to learn how things work—not necessarily to harm.
- Some hackers like to **experiment with computers** to learn how they work. They are not trying to steal or break things—they are just **curious** and want to **understand the system's limits**.
- **From types of hakers**

White-Hat Hacker: Help organizations find and fix security flaws

Black-Hat Hacker :Break into systems for personal gain or harm

- **Black-Hat:** A hacker stealing credit card data from an online store.
- **White-Hat:** A cybersecurity expert hired by a company to test its security systems.

- **Lamers** or **script kiddies**: Terms used to refer to technically inept غير كفء hackers المغفلون أو المهووسون بالبرامج النصية

1.Hackers

Lamers or Script Kiddies

- These are people who lack real technical skills.
- They use pre-made hacking tools or scripts created by others.
- They usually hack for fun or attention but can still cause serious damage.
- **Lamers or script kiddies** are people who **pretend يدعي to be hackers**, but they **don't really know what they're doing**.
- They just **copy tools or tricks** made by real hackers, without understanding how those tools work.

Types of Perpetrators

2. Malicious Insiders

•These are **people inside an organization**—like employees, contractors, or consultants.

•They **intentionally** harm the organization, often because of personal gain, revenge انتقام , or pressure from outsiders.

•Sometimes they work with **outsiders**—this is called **collusion**.التواطؤ

What is Collusion?

•**Collusion** means **secret cooperation** between someone inside the organization and someone outside.

•Together, they might steal data, bypass security, or commit fraud. تجاوز الأمان أو ارتكاب الاحتيال

Negligent Insiders

•These are **careless employees** who don't follow security policies.

•They might not be trained well or just don't take security seriously.

•They **accidentally** عن طريق الخطا **cause harm**—like clicking on phishing emails or losing sensitive data.

•Poorly trained and inadequately managed employees who cause damage accidently

Types of Perpetrators

Type	Who they are	What they do
	الأفراد الفضوليون المهتمون بالتكنولوجيا	
Hackers	Curious tech-savvy individuals	Explore systems, may or may not cause harm
Script Kiddies	Inexperienced users with basic tools	Use others' tools to hack for fun or status
		إيذاء متعمد
Malicious Insiders	Employees/contractors with access	Deliberately harm the organization
Negligent Insiders	Poorly trained staff	Cause unintentional harm through mistakes or carelessness
Collusion	Insider + Outsider team-up	Cooperate to commit crimes

Types of Perpetrators

- **Industrial spies** جواسيس

These are people who try to **get secret business information** from one company to help another company.

They may work **legally** (gathering public info) or **illegally** (stealing private info).

  - **Competitive intelligence**: Legally obtained data gathered using sources available to the public لاستخبارات التنافسية
  - **Industrial espionage**:تجسس Using illegal means to obtain information that is not available to the public

- **Cybercriminals**مجرمو الإنترنت
  - Hack into computers to steal and engage in computer fraud

(These are people who use computers or the internet to **commit crimes**—like **stealing money, personal information, or business secrets**.)

  - **Data breach**: Unintended release نشرof sensitive data or the access of sensitive data by unauthorized individuals

Unintended release means someone made a mistake (like emailing a file to the wrong person).

Unauthorized access means someone broke in (like a hacker stealing customer data).

Types of Perpetrators

- **Hacktivists**: Hack to achieve a political or social goal

They don't usually do it for money or personal gain.

Examples of what hacktivists might do:

- Deface a government website to protest a law. تشويه موقع إلكتروني حكومي احتجاجًا على قانون.
- Leak documents that reveal corruption..تسريب وثائق تكشف عن فساد
- Attack a company to stop them from supporting a cause they disagree with هاجمة شركة لمنعها من دعم قضية لا تتفق معها.

Goal: To spread a message or force social/political change.

Types of Perpetrators

- **Cyberterrorists**: :الإرهابيون الإلكترونيونLaunch computer-based attacks to intimidate or coerce ترهيب أو إكراهan organization in order to advance certain political or social objectives
- **Characteristics of Cyberterrorists:**
  - Use techniques that destroy or disrupt services

    -They might take down تعطيلpower grids, hospital systems, or banking networks.

    -They aim to **cause chaos** فوضيand **stop normal life**
  - Consider themselves to be at war
    - They see their hacking as a **fight**—like being a **soldier in a digital war**.
    - It's not just a crime to them—it's a **mission**
  - Have a very high acceptance of risk

    -They know they could get arrested اعتقال or even killed

    -But they are **willing to take that risk** because of their strong beliefs.
  - Seek maximum impact

    -They want to cause **as much damage as possible**

    -Their goal is to **shock people**, **make headlines** تصدر العناوين, and **get attention**

🔁 Difference between Hacktivists and Cyberterrorists:

Feature	Hacktivists	Cyberterrorists
Goal	Promote a cause (non-violent protest)	Cause fear, damage, and force change
Methods	Deface websites, leak info	Destroy systems, steal or block critical services
Risk level	Usually low or moderate risk	Very high risk – like a real war
Impact	Medium (awareness)	Maximum (fear, panic, destruction)

تعزيز قضية (الاحتجاج السلمي)

Strategies to Reduce Online Credit Card Fraud

- Use encryption technology
- Verify the address submitted online against the issuing bank
- Request a card verification value (CVV)
- Use transaction-risk scoring software
- Use smart cards
  - **Smart cards**: Memory chips are updated with encrypted data every time the card is used

Table 3.6 - Federal Laws that Address Computer Crime

Federal law	Subject area
USA Patriot Act	Defines cyberterrorism and associated penalties
Identity Theft and Assumption Deterrence Act (U.S. Code Title 18, Section 1028)	Makes identity theft a federal crime with penalties up to 15 years imprisonment and a maximum fine of $250,000
Fraud and Related Activity in Connection with Access Devices Statute (U.S. Code Title 18, Section 1029)	False claims regarding unauthorized use of credit cards
Computer Fraud and Abuse Act (U.S. Code Title 18, Section 1030)	Fraud and related activities in association with computers: • Accessing a computer without authorization or exceeding authorized access • Transmitting a program, code, or command that causes harm to a computer • Trafficking of computer passwords • Threatening to cause damage to a protected computer
Stored Wire and Electronic Communications and Transactional Records Access Statutes (U.S. Code Title 18, Chapter 121)	Unlawful access to stored communications to obtain, alter, or prevent authorized access to a wire or electronic communication while it is in electronic storage

Source Line: Course Technology/Cengage Learning.

Trustworthy Computing

Delivers secure, private, and reliable computing experiences based on sound business practices

Risk Assessment

- Assessing security-related risks to an organization's computers and networks from internal and external threats
- Identify investments that will protect the organization from most likely and serious threats
- Asset - Hardware, software, information system, network, or database used by an organization to achieve its business objectives
- Loss event - Any occurrence that has a negative impact on an asset

Figure 3.5 - General Security Risk Assessment

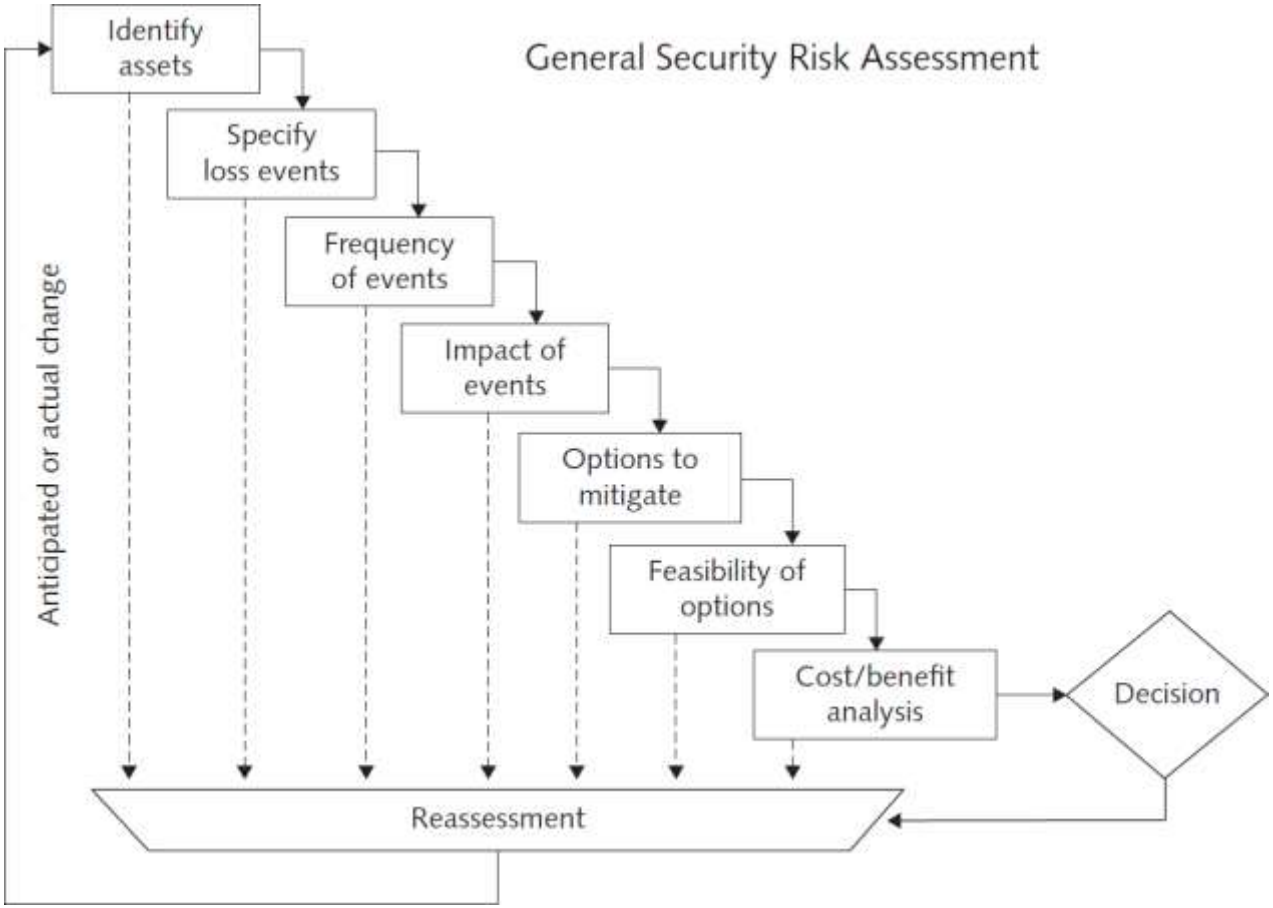

Source Line: General Security Risk Assessment Guidelines, ASIS International (2003). See the Standards and Guidelines page of the ASIS International website (www.asisonline.org) for revisions and/or updates. Reprinted by permission.

Security Policy

- Defines an organization's security requirements and the controls and sanctions needed to meet those requirements
- Delineates responsibilities and expected behavior
- Outlines what needs to be done and not how it should be done

Establishing a Security Policy

- Areas of concern
  - Use of email attachments
  - Use of wireless devices
- **Virtual private network (VPN)**: Works by using the Internet to relay communications
  - Encrypts data at the sending end and decrypts it at the receiving end

Educating Employees and Contract Workers

- Motivates them to understand and follow the security policies
- Users must help protect an organization's information systems and data by:
  - Guarding their passwords
  - Prohibiting others from using their passwords
  - Applying strict access controls
  - Reporting all unusual activity to the organization's IT security group
  - Ensuring that portable computing and data storage devices are protected

Prevention

Install a corporate firewall

- Limits network access based on the organization's access policy

Intrusion detection system (IDS)

- Monitors system and network resources and activities
- Notifies network security personnel when network traffic attempts to circumvent the security measures

Antivirus software

- Scans for a specific sequence of bytes, known as a virus signature
  - **Virus signature**: Indicates the presence of a specific virus

Prevention

Implement safeguards against attacks by malicious insiders

- Promptly delete the computer accounts, login IDs, and passwords of departing employees and contractors

Defend against cyberterrorism

- **Department of Homeland Security (DHS)**:Aims to secure critical infrastructure and information systems

Address critical internet security threats

- High-impact vulnerabilities should be fixed on priority basis

Conducting periodic it security audits

- **Security audit**: Evaluates whether an organization has a well-considered security policy in place and if it is being followed

United States Computer Emergency Readiness Team (US-CERT)

- Partnership between the Department of Homeland Security and the public and private sectors
- Protect the nation's Internet infrastructure against cyberattacks
- Serves as a clearinghouse for information on new viruses, worms, and other computer security topics

Figure 3.6 - Intrusion Detection System

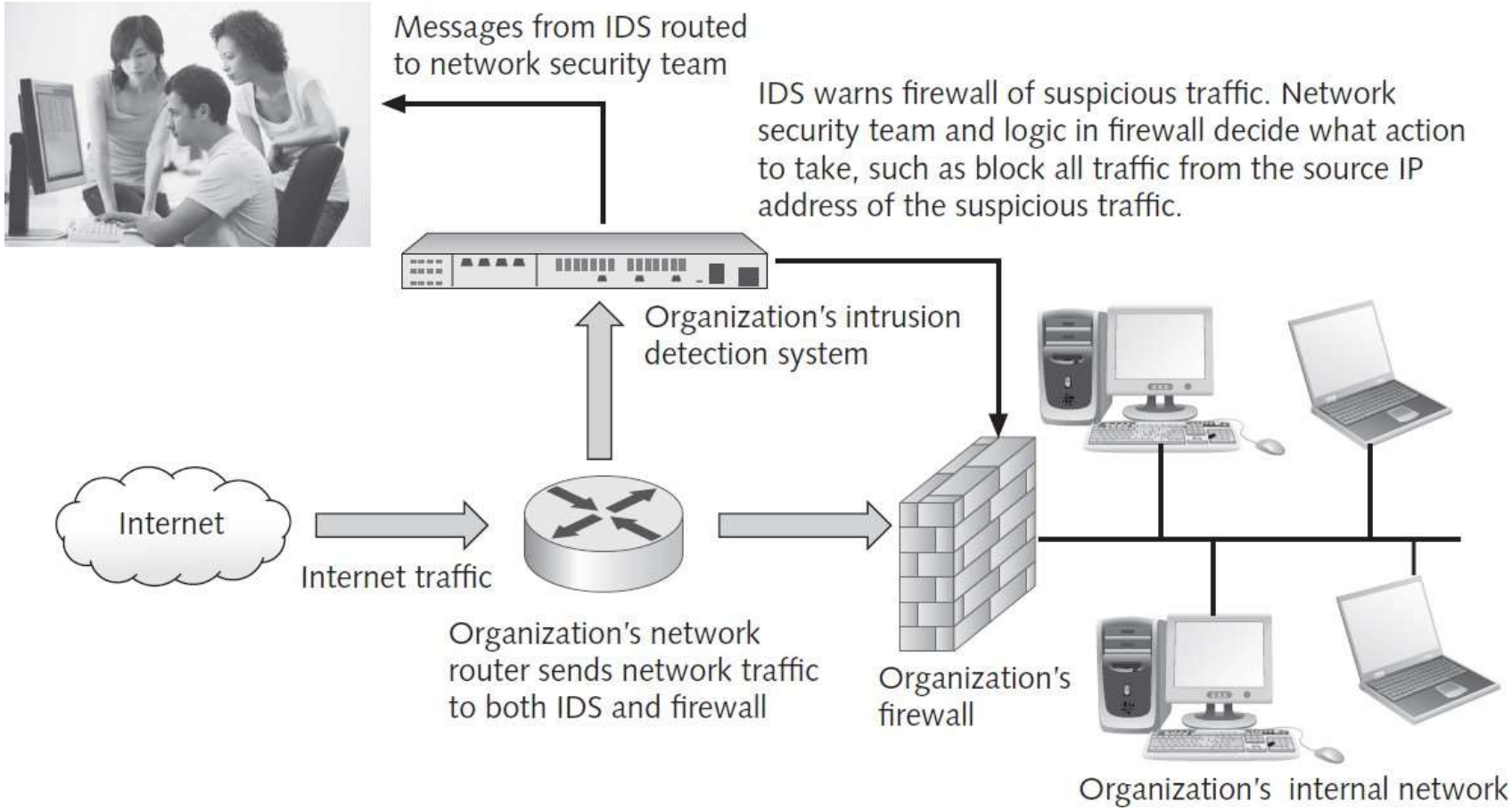

Credit: Monkey Business Images/Shutterstock.com.

Detection Systems

Catch Intruders in the Act

Minimize the Impact of Intruders

Response Plan

- Incident notification
  - Define who to notify and who not to notify
  - Refrain from giving out specific information about a compromise in public forums
- Protection of evidence and activity logs
  - Document all details of a security incident to help with future prosecution and incident eradication
- Incident containment
  - Determine if an attack is dangerous enough to warrant shutting down the systems

Response

- Eradication
  - Collect and log all criminal evidence from the system
  - Verify that all backups are current, complete, and free of any virus
- Incident follow-up
  - Determine how the security was compromised
  - Conduct a review to evaluate how the organization responded
  - Create a detailed chronology of all events
  - Estimate the monetary damage

Computer Forensics

- Combines elements of law and computer science to:
  - Identify, collect, examine, and preserve data from computer systems
  - Collect data in a manner that preserves the integrity of the data gathered so that it is admissible as evidence in a court of law

Table 3.10 - Partial List of Constitutional Amendments and Statutes Governing the Collection of Evidence

Law	Subject area
Fourth Amendment	Protects against unreasonable search and seizure
Fifth Amendment	Provides protection from self-incrimination
Wiretap Act (18 U.S.C. 2510-2522)	Regulates the collection of the content of wire and electronic communications
Pen Registers and Trap and Trace Devices Statute (18 U.S.C. 3121-27)	Provides restrictions on the use of pen registers and trap and trace devices (a pen register is a device that records all numbers dialed from a particular phone; a trap and trace device shows the phone numbers that have made calls to a specific phone)
Stored Wire and Electronic Communications Act (18 U.S.C 2701-120)	Addresses the disclosure of stored wired and electronic communications and transaction records by Internet service providers

Source Line: Course Technology/Cengage Learning.

Summary

- Ethical decisions in determining which information systems and data most need protection
- Most common computer exploits
  - Viruses and worms
  - Trojan horses
  - Distributed denial-of-service attacks
  - Rootkits and spam
  - Phishing and spear-fishing
  - Smishing and vishing

Summary

- Perpetrators include:
  - Hackers
  - Crackers
  - Malicious insider
  - Industrial spies
  - Cybercriminals
  - Hacktivist
  - Cyberterrorists

Summary

- Must implement multilayer process for managing security vulnerabilities, including:
  - Assessment of threats
  - Identifying actions to address vulnerabilities
  - User education
- IT must lead the effort to implement:
  - Security policies and procedures
  - Hardware and software to prevent security breaches
- Computer forensics is key to fighting computer crime in a court of law